CAEG Part A Assignment Solutions

Projection of Points

1. A point is lying on HP, 20 mm behind VP and 25 mm from RPP. Draw its projections and name the side view.

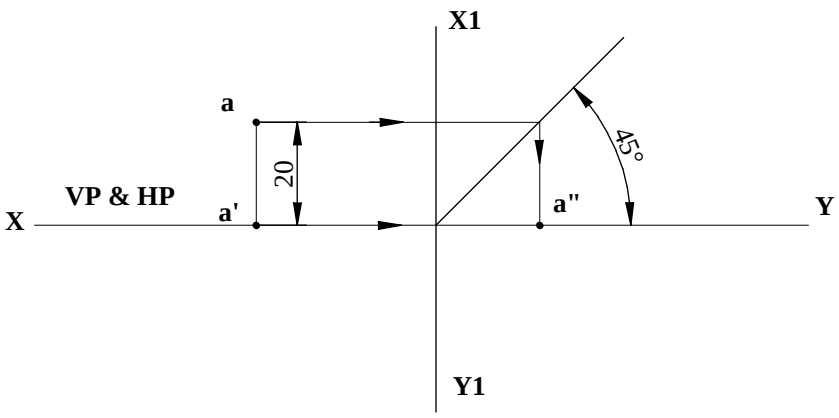

The point is common to II & III quadrant. The name of the side view is left side view

Q 2.
Draw and state the quadrants in which the following points are located.
A - front view 30 mm below XY line and Top view 40 mm above XY line
B - Front and Top views 25 mm below XY line.
C - Front view 35 mm and Top view 50 mm above XY line.
D - Front view 40 mm above XY line and Top view 30 mm below XY line.

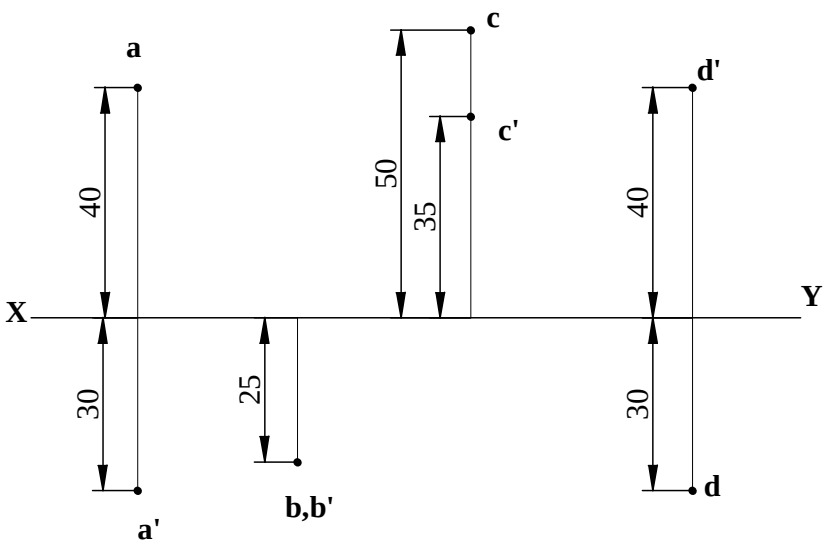

A is in III quadrant, 30 mm below HP and 40 mm behind VP
B is in IV quadrant, 25 mm below HP & 25 mm in front of VP
C is II quadrant, 35 mm baove HP and 50 mm behind VP
D is in I quadrant, 40 mm above HP & 30 mm in front of VP

3. A point G is 25 mm below HP and is situated in the third quadrant. Its shortest distance from the intersection of HP & VP is 45 mm. Draw its projections and find its distance from VP.

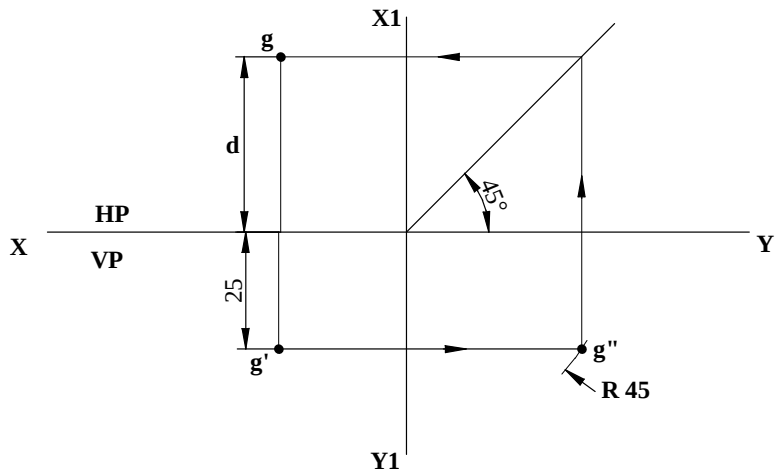

The distance of the point G behind VP is d=37.42 mm

4. A point 30 mm above XY line is the front view of two points A and B. The top view of A is 40 mm behind VP and the top view of B is 45 mm in front of VP. Draw the projections of the points and state the quadrants in which the points are situated.

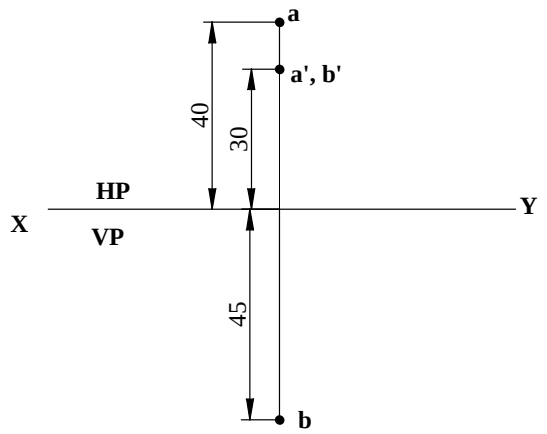

A is in II quadrant, 30 mm above HP and 40 mm behind VP
B is in I quadrant, 30 mm above HP & 45 mm in front of VP

5. The common point 40 mm below XY line represents not only the front views of three points A, B and C but also the top view of point C. The top view of point B is lies on XY line and top view of point A lies 50 mm above it. Draw the projections of the points and add the right-side view to the point A only. Also state in which the quadrants the points lie.

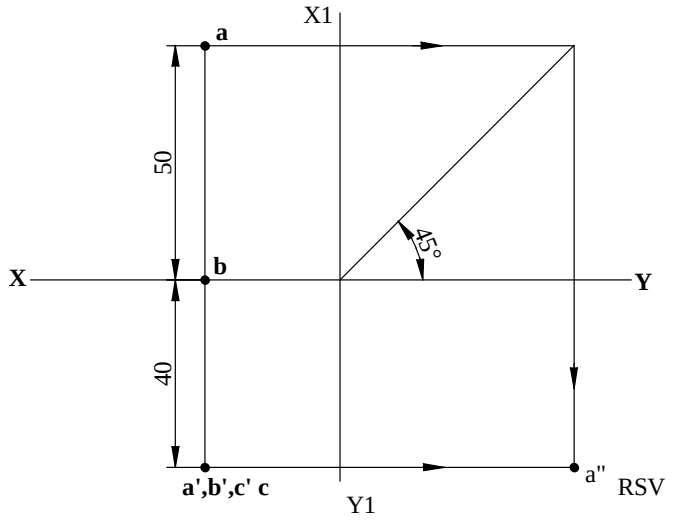

A is in III quadrant, 40 mm below HP and 50 mm behind VP
B is either in III or IV quadrant, 30 mm below HP & in VP
C is in IV quadrant, 40 mm below HP and in front of VP

Projection of straight lines

1. A straight-line PQ, 65 mm long, is inclined at 45 deg to HP and 30 deg to VP. The point P is 70 mm from both the reference planes and point Q is nearer to the reference planes. Draw the projections.

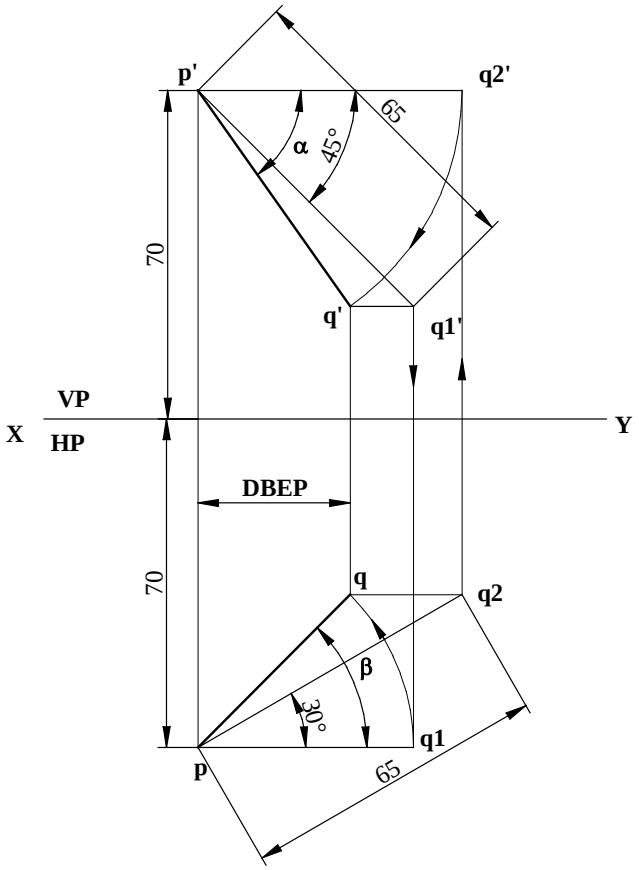

Answers:
p'q'=56.3 mm, pq = 46 mm, α =55 deg , β = 46 deg
DBEP =32.5 mm

2. A line has its end A 10 mm above HP and 15 mm in front of VP. The end B is 55 mm above HP. The line is inclined at 30 deg to HP and 35 deg to VP. Draw the projections of the line and determine the true length.

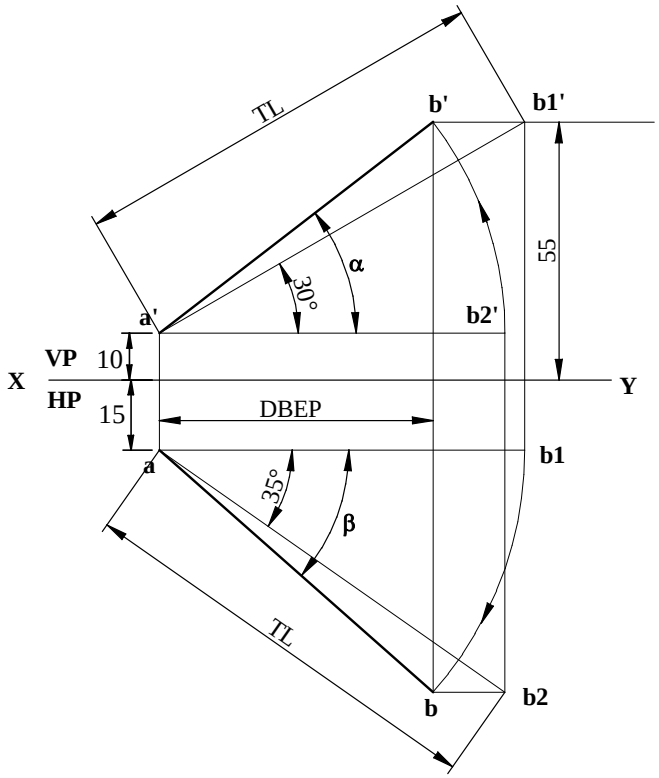

Answers:
a'b'=73.72 mm, ab = 78 mm, α =38 deg , β = 42 deg
DBEP =58.4 mm

Q 3.The front view of a line CD 90 mm long measures 65 mm and is inclined at 45 deg to XY line. End C is 15 mm above HP and is in VP. Draw the projections of the line and determine the true inclinations of the line with HP & VP.

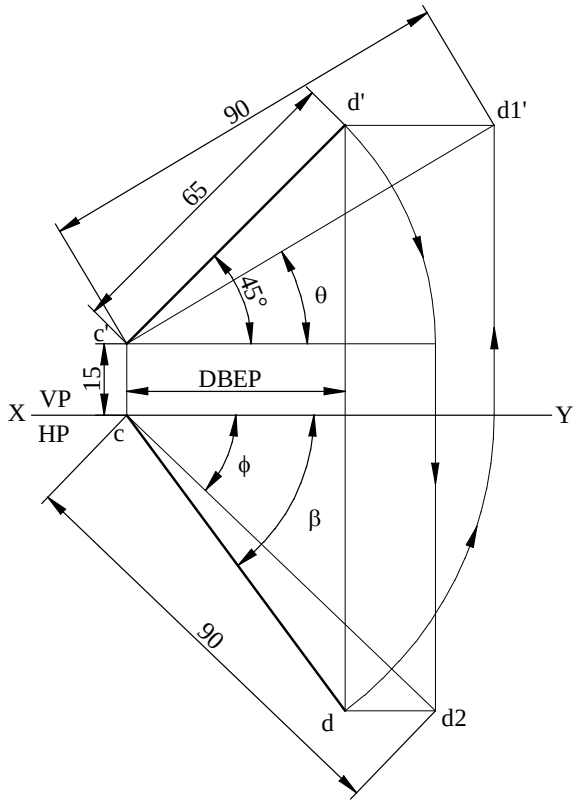

Answers:
cd =77.38 mm, θ =31 deg , ϕ = 44 deg, β = 54 deg
DBEP =46 mm

Q 4.The top view of a line PQ is 70 mm and its front view is 60 mm. The end P is 15 mm above HP & 20 mm in front of VP. Draw the projections of the line if the distance between their end projectors measured parallel to the XY line is 50 mm.

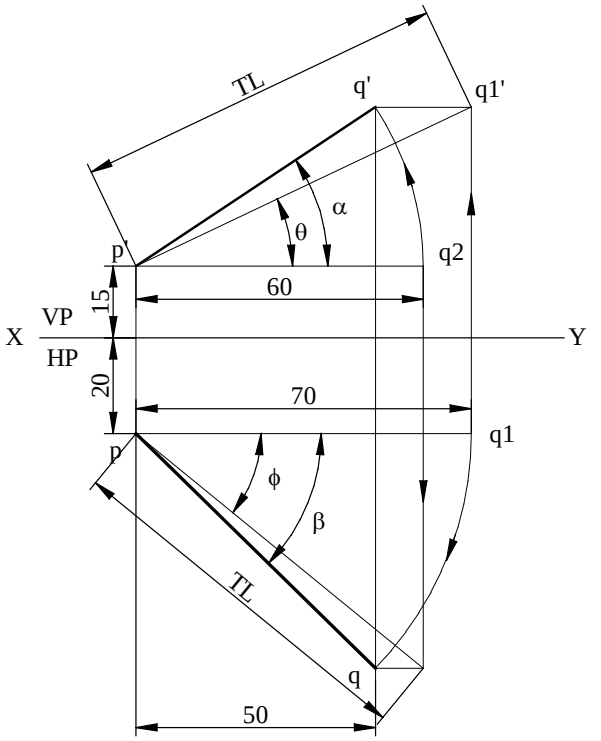

Answers:
TL =77.46 mm, θ =26 deg , α = 34 deg, ϕ = 39 deg, β = 45 deg

Q 5.Draw the front, top and left side views of a line RS 80 mm long which is inclined at 60 deg to HP and 30 deg to VP. The end R is in HP & the end S is in VP.

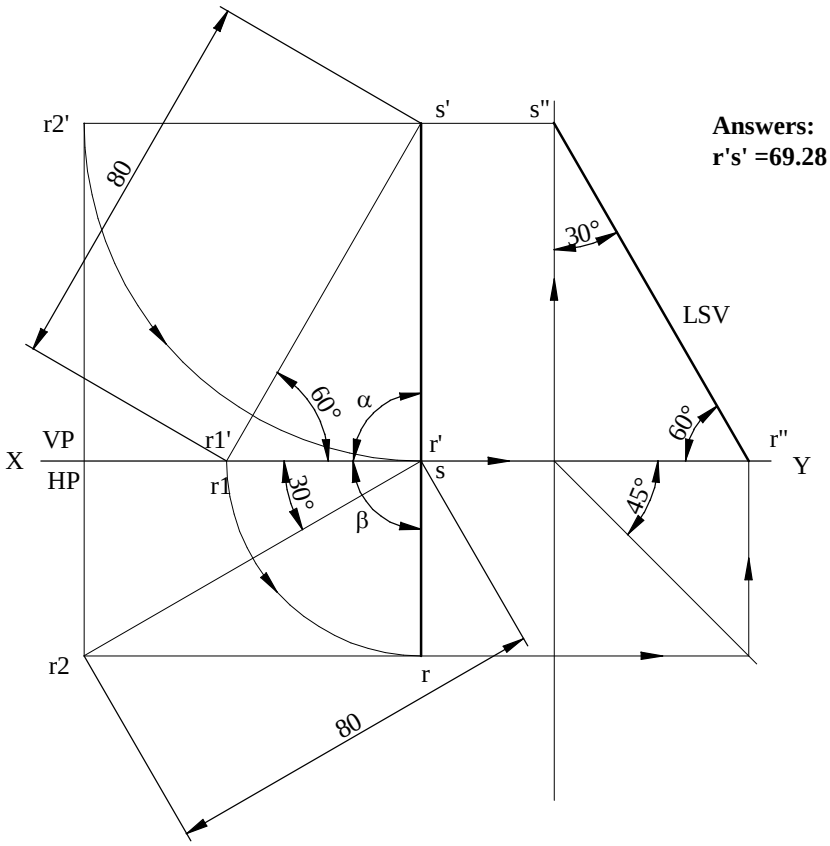

Answers:
r's' =69.28 mm, rs=40 mm , α = β = 90 deg

Projection of Planes

1. An equilateral triangular lamina of 35 mm sides lies with one of its edges on HP such that the surface of the lamina is inclined to HP at 60 deg. The edge on which it rests is inclined to VP at 60 deg. Draw its projections.

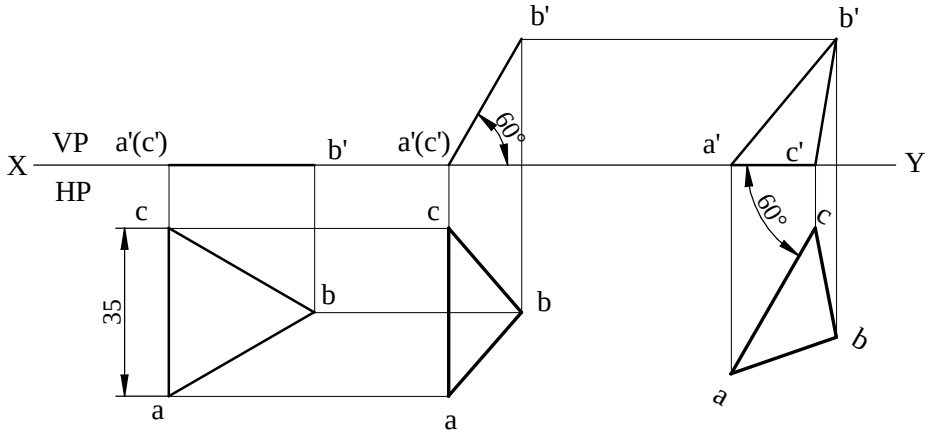

2. A square plate of 30 mm sides rests on HP such that one of the diagonals is inclined at 30 deg. to HP and 45 deg to VP. Draw its projections.

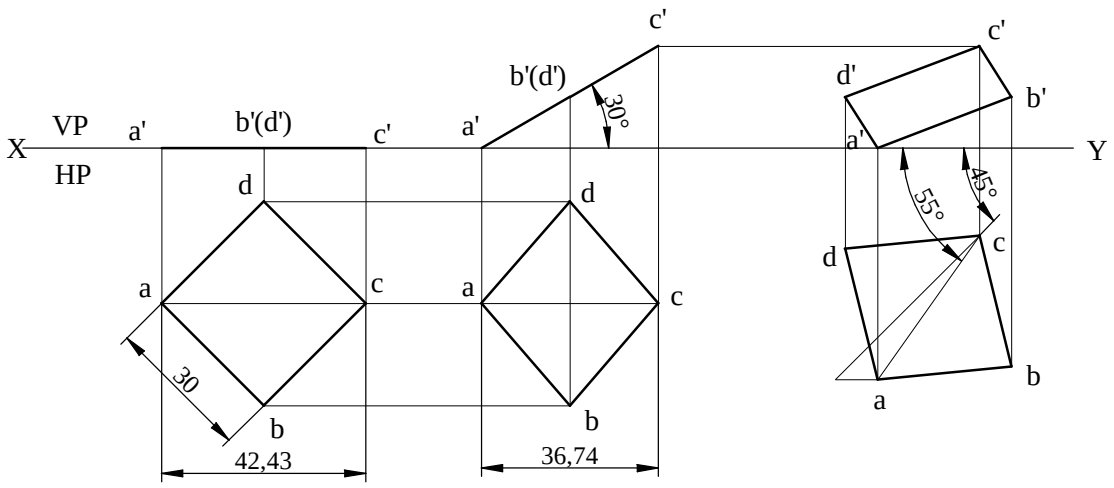

3. A rectangular lamina of 35 mm x 20 mm rests on HP one of its shorter edges. The lamina is rotated about the edge on which it rests till it appears as a square in the top view. The edge on which the lamina rests is inclined at 30 deg to VP. Draw its projections and find its inclination to HP.

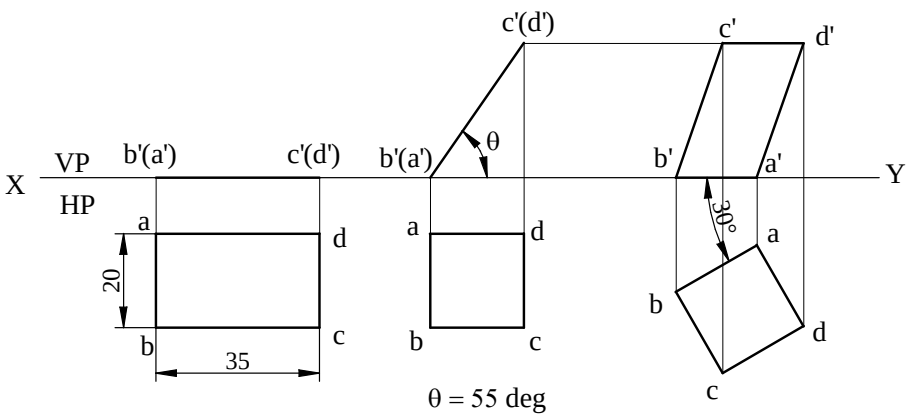

4. A pentagonal lamina of edges 25 mm is resting on HP with one of its corners such that the edge opposite to this corner is 20 mm above HP & makes an angle of 45 deg with VP. Draw the top and front views of the plane lamina in this position. Determine the inclination of the lamina with HP.

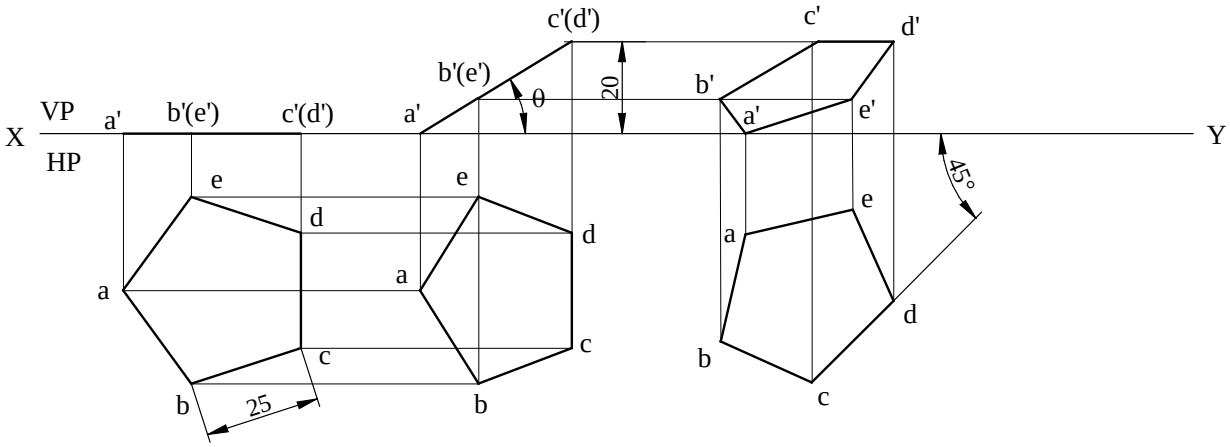

θ=31 deg

5. Draw the projections of a circular plate of negligible thickness of 50 mm diameter resting on HP on a point A on the circumference, with its plane inclined at 45^0 to HP and the top view of the diameter passing through the resting point makes 60^0 with VP.

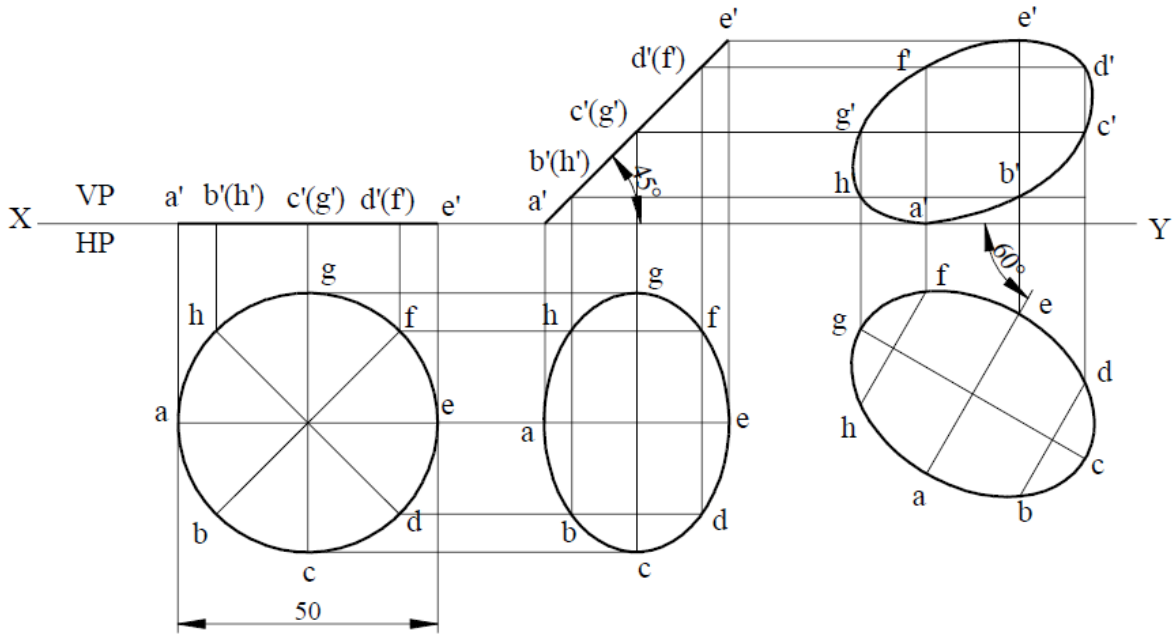

****